PV Protector®

Professional Bird Barrier System for Solar Modules

Safe | Solid | Speedy

Installs in minutes.

Protects for years.

Tool-free external installation. Zero risk. Zero guesswork.

WARRANTY 10 YEARS WARRANTY

Different Frames — Complicated Installation

Most solar modules on the market feature a **box-style profile** on the **short-side frames** and an **inner flat profile** on the **long-side frames**.

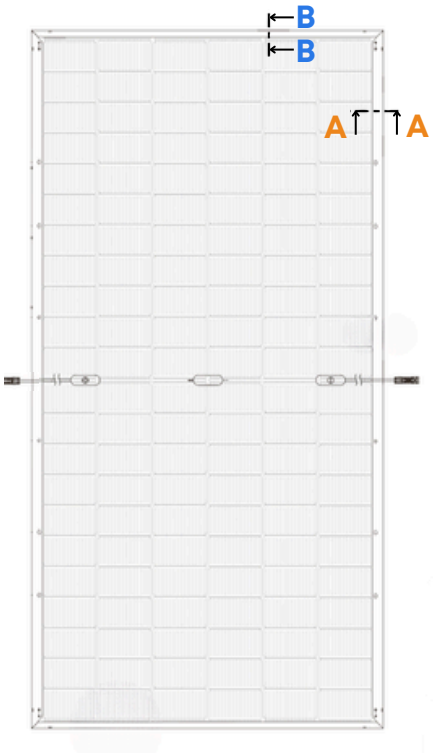

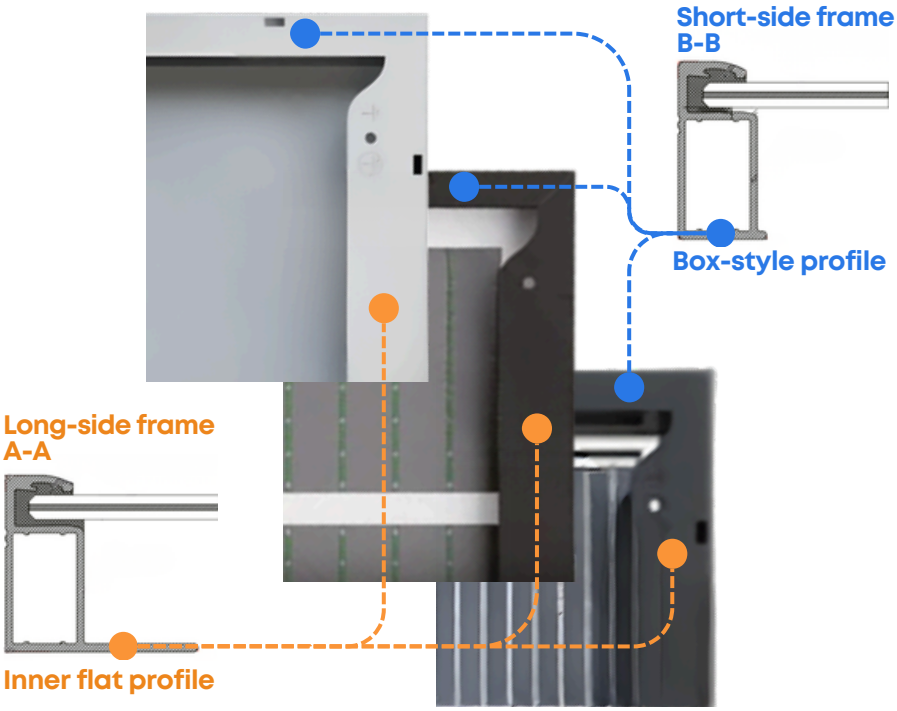

Common Installer Pain Points

Inventory Complexity → Higher Costs

Multiple Clip Variants → Slower Installation

Blind Under-Panel Work → Safety Risks

Time Lost on Roof → Profit Margin Lost

PV Protector® — One External Solution for Common Frames

Innovative Segment Angle
→ External-edge installation

No Reaching Under Panels
→ Safer. Save up to 38% time.

Safe

Smart Trimming Design
→ Mounting rail compatible

No Gaps, No Weak Points
→ Full 360° protection

Solid

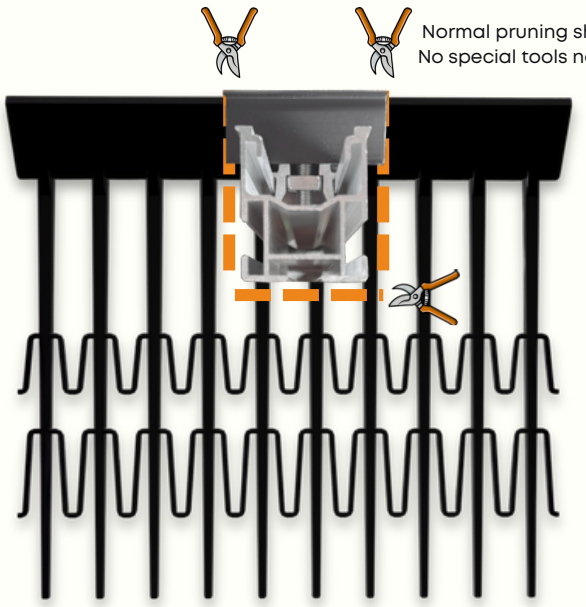

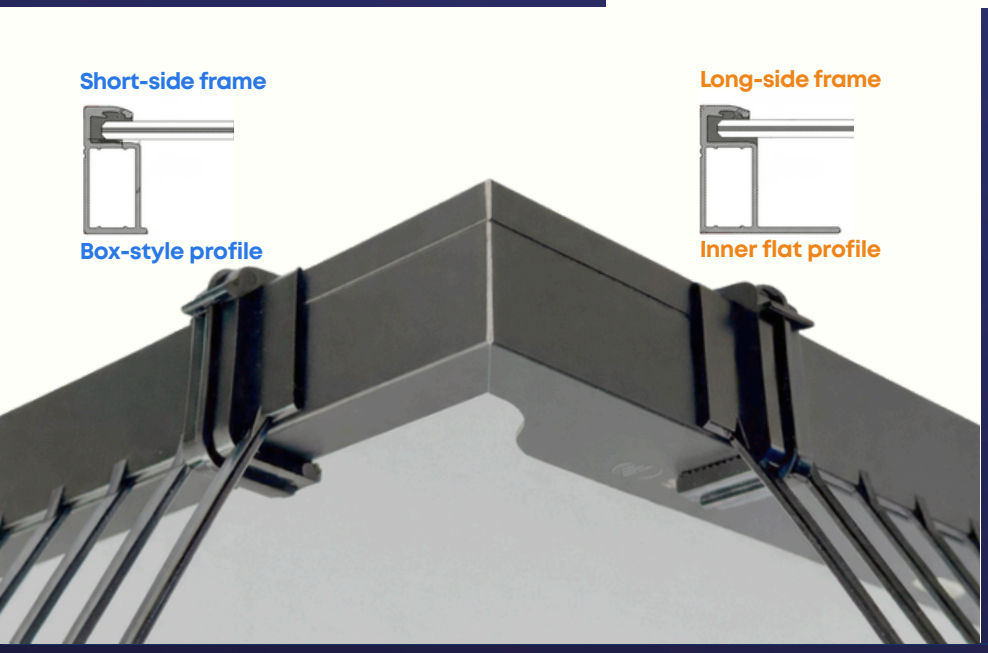

Universal Clip – Long & Short
→ Fits all standard frame edges

Tool-Free, External Mounting
→ Fast installation

Speedy

PV Protector® — Advantages

- **Simple System**
  Easy upsell opportunity.
- **All-in-One Kit**
  Simplified inventory. One SKU.
- **Reduced Labour Costs**
  Fast external installation. Predictable timing.
- **No Metal Contact**
  No scratches or corrosion. No warranty risk.

Traditional Systems — Limits

- **Complex Installation**
  Specialized tools & training required.
- **Frame-Profile Dependent**
  Extra parts, variants & costs.
- **Unpredictable Labour Time**
  Cutting, screwing, drilling, gluing or callbacks
- **Sharp Metal Edges**
  Risk of frame damage & liability claims.

Become a PV Protector® Partner

Rooftop installation time is precious.
We're proud to protect both your panels —
and the people who install them.

WARRANTY 10 YEARS WARRANTY

Scan to watch:
90-Second Install Demo

Product by **Pyramidi GmbH**

Head Office
Max-Eyth-Straße 23
71254 Ditzingen, Germany
+49 704 4969 9766
info@pv-protector.com

Warehouse
Wannenweg 2
71254 Ditzingen, Germany

More Information at:
www.pv-protector.com

PV Protector®

Professional Bird Barrier System for Solar Modules

© Pyramidi GmbH 2026